THERMA-TRU
Benchmark Doors

WOOD EDGE
OPAQUE FIBERGLASS SINGLE DOOR
w/ SIDELITE(S)

INSWING/OUTSWING
"IMPACT"

GENERAL NOTES

1. This product has been evaluated and is in compliance with the 9th Edition (2026) Florida Building Code (FBC) structural requirements excluding the "High Velocity Hurricane Zone" (HVHZ).

2. Product anchors shall be as listed and spaced as shown on details. Anchor embedment to base material shall be beyond wall dressing or stucco.

3. When used in areas requiring wind borne debris protection this product complies with FBC Sections 1609.1.2 & R301.2.1.2 and does not require an impact resistant covering. This product meets missile level "D" and includes Wind Zone 4 as defined in ASTM E1996.

4. For 2x stud framing construction, anchoring of these units shall be the same as that shown for 2x buck masonry construction.

5. Site conditions that deviate from the details of this drawing require further engineering analysis by a licensed engineer or registered architect.

6. Benchmark Door and Sidelite panels require the use of "J" part numbers and must be stained or painted within six months of installation.

TABLE OF CONTENTS

SHEET#	DESCRIPTION	SHEET#	DESCRIPTION
1	Typical Elevations, Design Pressures & General Notes	9	Vertical Cross Sections (Thresholds)
2	Door Panel Details	10	Buck Anchoring
3	Sidelite Panel Details	11	Frame Anchoring
4	Elevations	12	Hardware Details
5	Horizontal & Vertical Cross Sections (2X Buck)	13	Glazing Details
6	Horizontal Cross Sections	14	Components
7	Horizontal & Vertical Cross Sections (1X Buck)	15	Bill of Materials
8	Horizontal & Vertical Cross Sections (Direct to Masonry)		

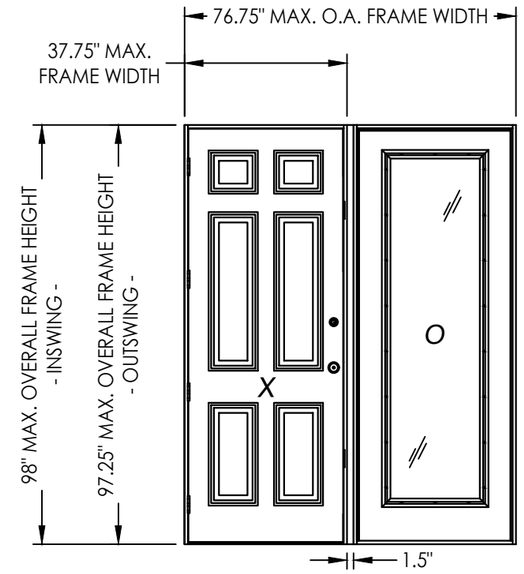

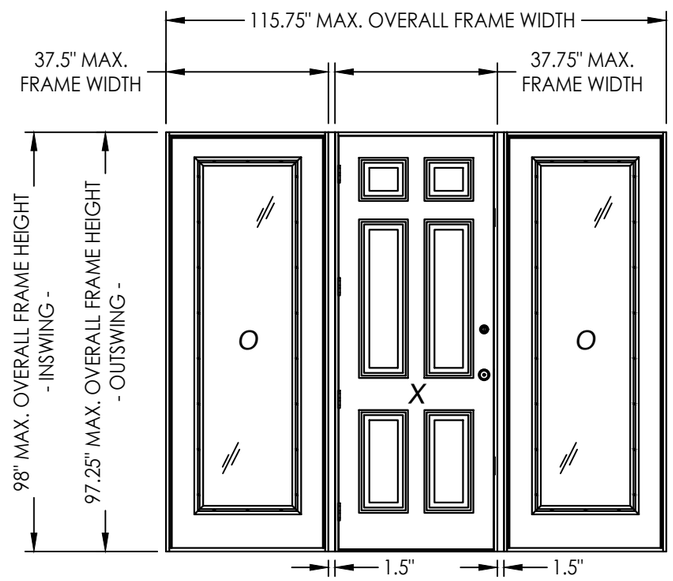

CONFIGURATION	DESIGN PRESSURE (PSF) INSWING		DESIGN PRESSURE (PSF) OUTSWING	
	POSITIVE	NEGATIVE	POSITIVE	NEGATIVE
XO, OX, OXO	+55.0	-55.0	+55.0	-55.0

See Sheet 4 for Hardware Specifications

L. F. SCHMIDT LICENSE No. 43409 STATE OF FLORIDA PROFESSIONAL ENGINEER

Digitally signed by Lyndon F Schmidt
Date: 2026.08.05 10:57:13 -04'00'

This item has been digitally signed and sealed by **L. F. Schmidt, P.E.** on the date adjacent to the seal.
Printed copies of this document are not considered signed and sealed and the signature must be verified on any electronic copies.

THIS PRODUCT APPROVAL IS VALID ONLY FOR THE STATE OF FLORIDA

Documents Prepared By:
Lyndon F. Schmidt
P.E. No. 43409
RW BUILDING CONSULTANTS, INC.
P.O. Box 230, Valrico, FL 33595
Phone No.: 813.659.9197
FBPE Registry No. 9813

PRODUCT: THERMA-TRU FIBERGLASS DOOR

PART OR ASSEMBLY: TYPICAL ELEVATION, DESIGN PRESSURES & GENERAL NOTES

NO.	DATE	BY
6	7/03/26	UPDATE TO 9TH ED. (2026) FBC	LFS
5	7/17/23	UPDATE TO 8TH ED. (2023) FBC	LFS
4	7/14/20	UPDATE TO 7th ED (2020) FBC	LFS

REVISIONS

DATE: 4/28/15
SCALE: N.T.S.
DWG. BY: JK
CHK. BY: LFS
DRAWING NO.: FL-17540.4
SHEET 1 OF 15

© 2015 R.W. Building Consultants Inc.

Z:\2023 FBC Drawings\Therma-Tru\FL-17540 R7\FL-17540.1-4.dwg

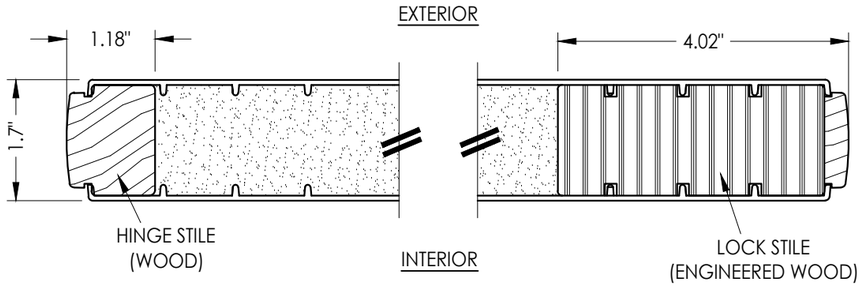

1/2 **HORIZONTAL CROSS SECTION**

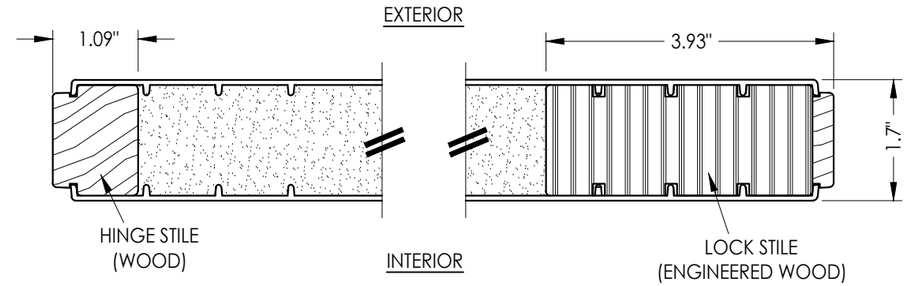

2/2 **HORIZONTAL CROSS SECTION**

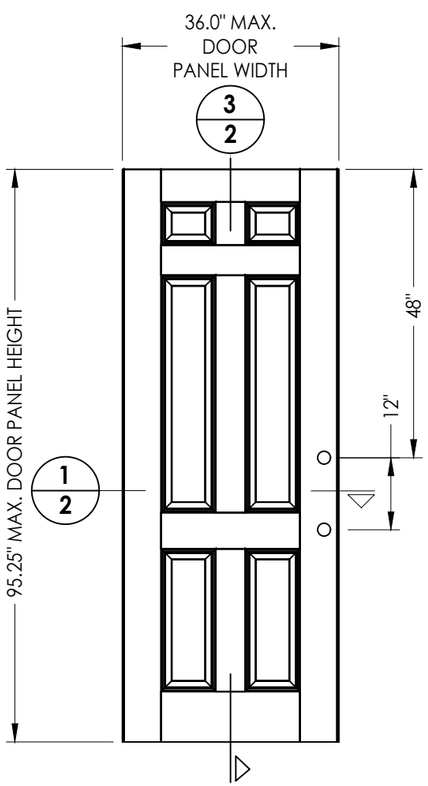

40 **DOOR PANEL**
BOOK

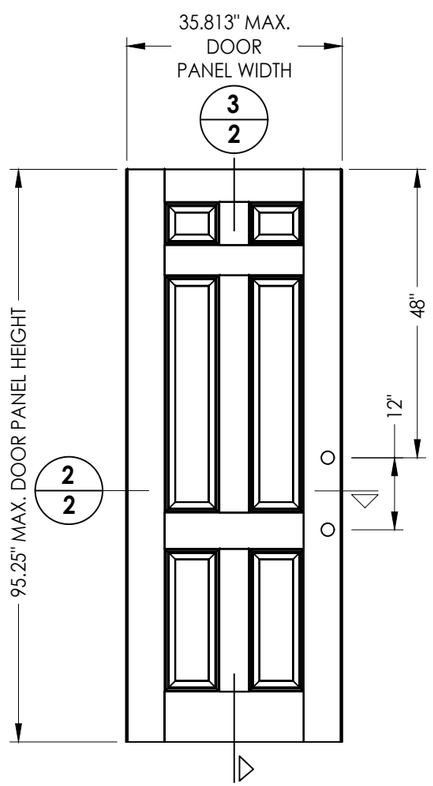

41 **DOOR PANEL**
Hybrid Door

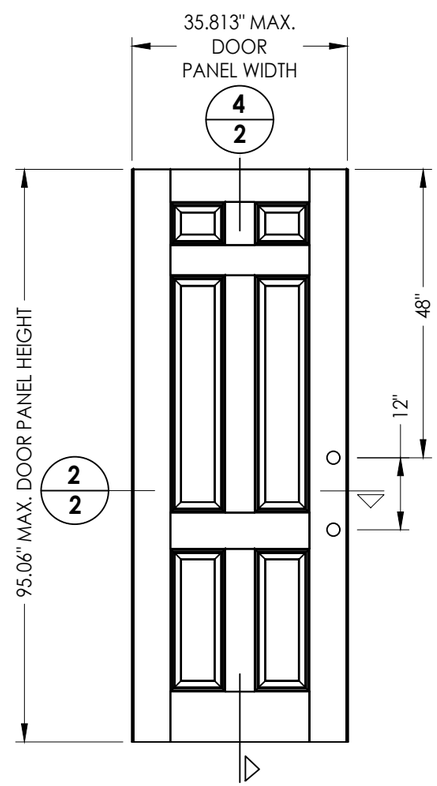

42 **DOOR PANEL**
U1 Door

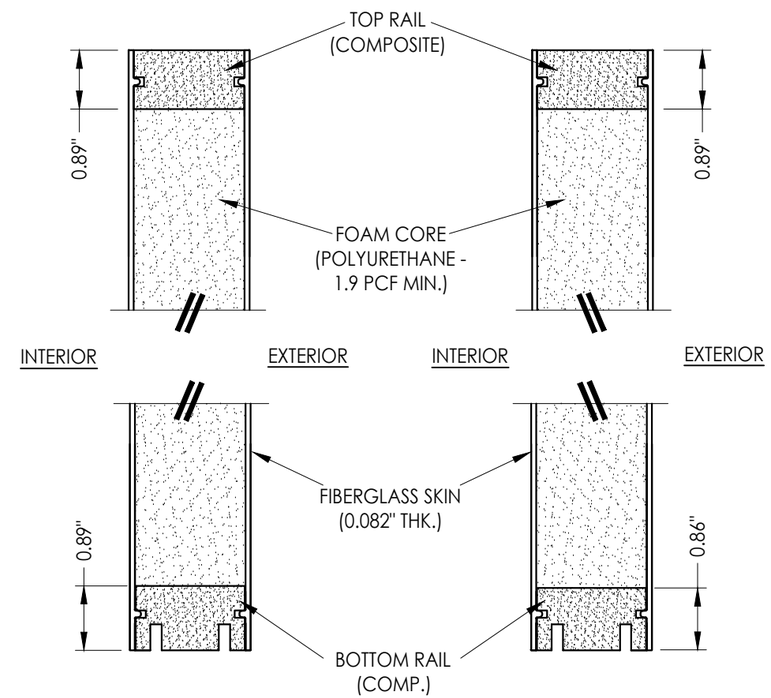

3/2 **VERTICAL CROSS SECTION**

4/2 **VERTICAL CROSS SECTION**

Documents Prepared By:
Lyndon F. Schmidt
P.E. No. 43409

RW BUILDING CONSULTANTS, INC.
P.O. Box 230, Valrico, FL 33595
Phone No.: 813.659.9197
FBPE Registry No. 9813

PRODUCT: *THERMA–TRU FIBERGLASS DOOR*

PART OR ASSEMBLY: *DOOR PANEL DETAILS*

NO.	DATE	REVISIONS	BY
6	7/03/26	UPDATE TO 9TH ED. (2026) FBC	LFS
5	7/17/23	UPDATE TO 8TH ED. (2023) FBC	LFS
4	7/14/20	UPDATE TO 7th ED (2020) FBC	LFS

DATE: 4/28/15
SCALE: N.T.S.
DWG. BY: JK
CHK. BY: LFS
DRAWING NO.: FL–17540.4
SHEET 2 OF 15

© 2015 R.W. Building Consultants Inc.

Z:\2023 FBC Drawings\Therma-Tru\FL-17540 R7\FL-17540.1-4.dwg

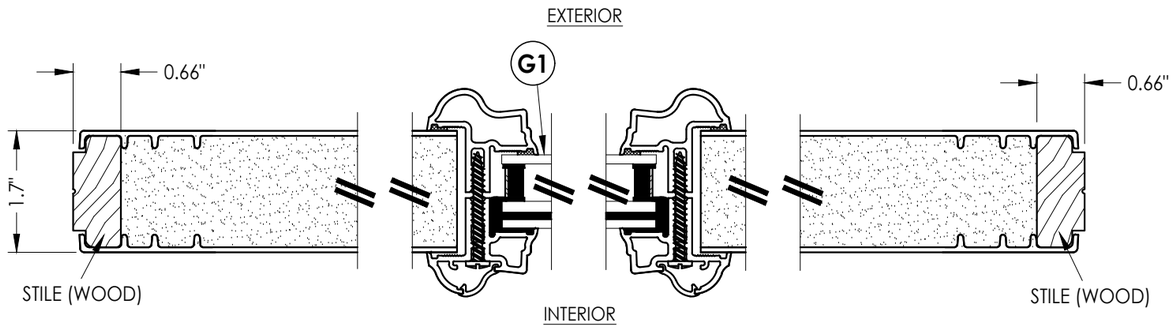

1/3 **HORIZONTAL CROSS SECTION**

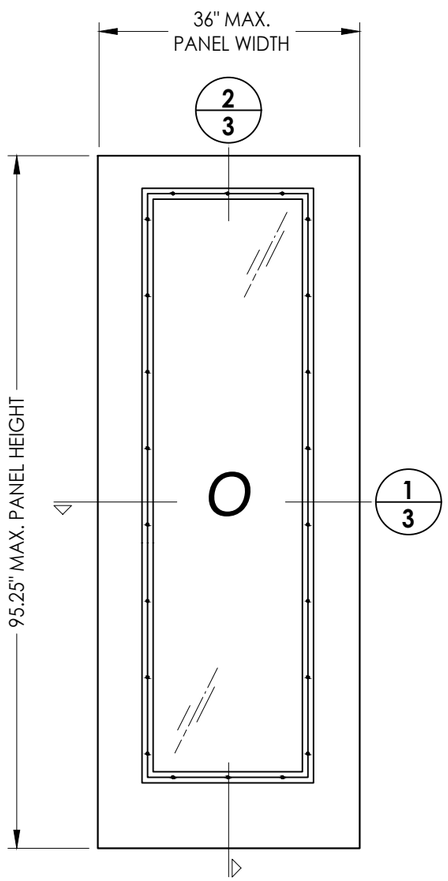

50 **SIDELITE PANEL**

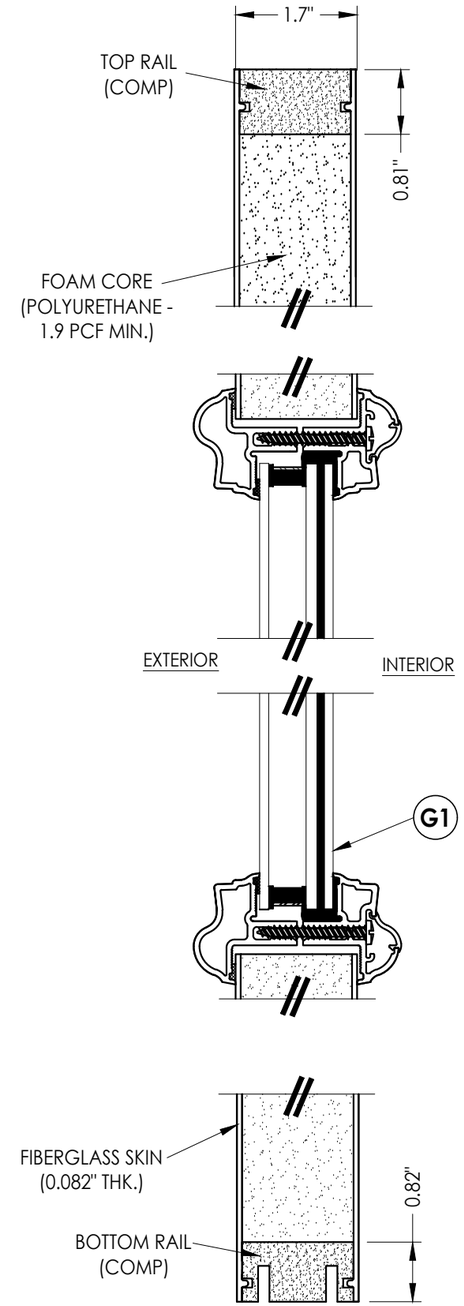

2/3 **VERTICAL CROSS SECTION**

Documents Prepared By:
Lyndon F. Schmidt
P.E. No. 43409

RW BUILDING CONSULTANTS, INC.
P.O. Box 230, Valrico, FL 33595
Phone No.: 813.659.9197
FBPE Registry No. 9813

PRODUCT: THERMA-TRU FIBERGLASS DOOR

PART OR ASSEMBLY: SIDELITE PANEL DETAILS

NO.	DATE		BY
6	7/03/26	UPDATE TO 9TH ED. (2026) FBC	LFS
5	7/17/23	UPDATE TO 8TH ED. (2023) FBC	LFS
4	7/14/20	UPDATE TO 7th ED (2020) FBC	LFS

REVISIONS

DATE: 4/28/15
SCALE: N.T.S.
DWG. BY: JK
CHK. BY: LFS
DRAWING NO.: FL-17540.4
SHEET 3 OF 15

© 2015 R.W. Building Consultants Inc.

Z:\2023 FBC Drawings\Therma-Tru\FL-17540 R7\FL-17540.1-4.dwg

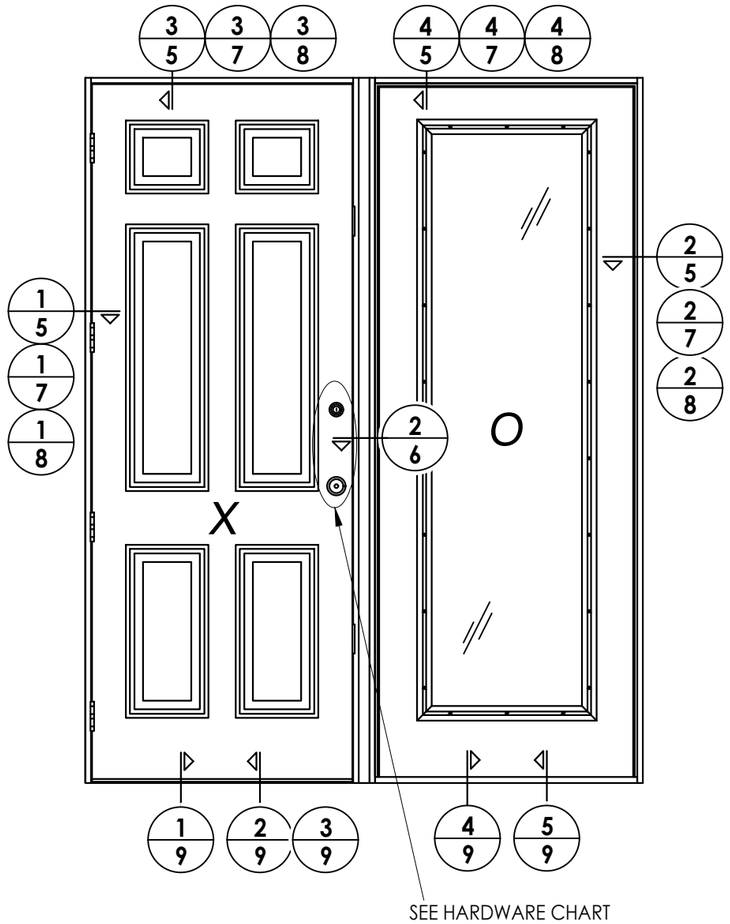

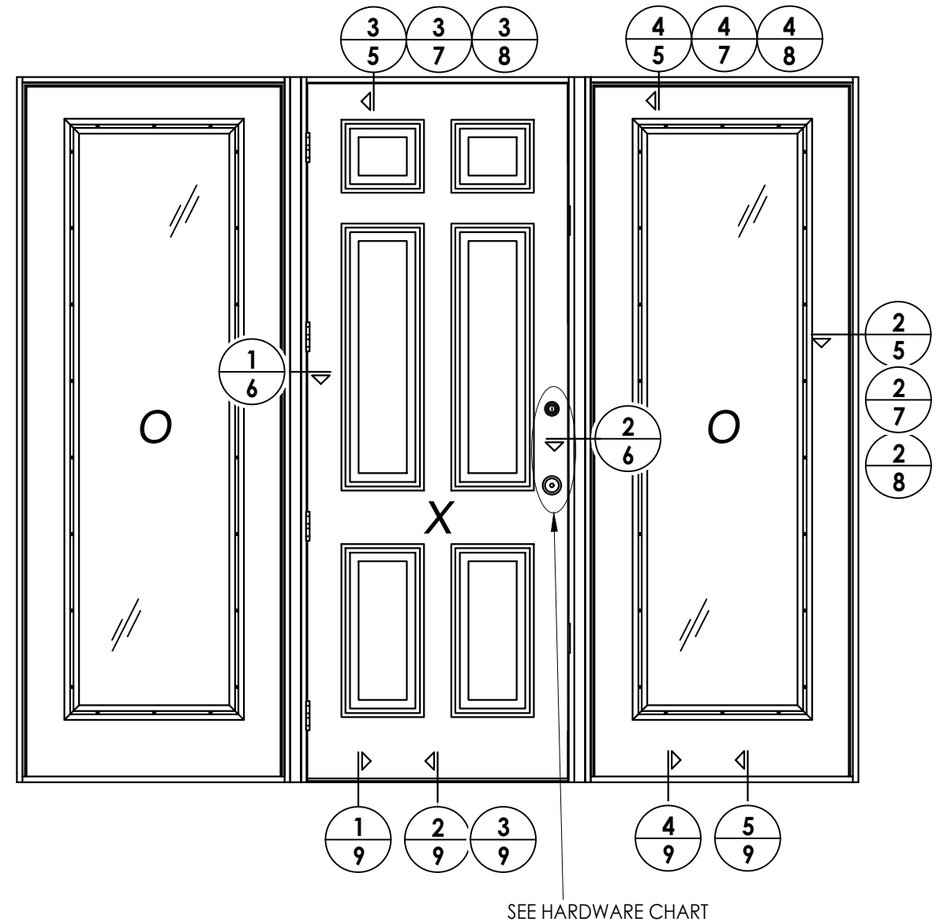

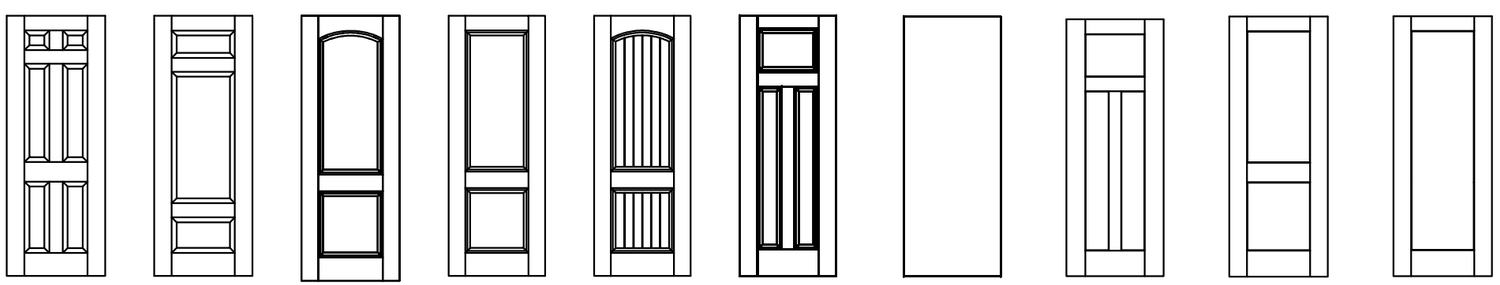

Benchmark Door Panel Options

Products approved include all embossed and recessed panel doors.
Similar opaque panel configurations are allowed.
Panels shown are for illustration and are representative only.

HARDWARE TABLE	
MANUFACTURER	***MODEL***
SCHLAGE	**KNOB: F51** **DEADBOLT: B60**
KWIKSET	**KNOB: SIGNATURE SERIES** **DEADBOLT: SIGNATURE SERIES (980)**

Documents Prepared By:
Lyndon F. Schmidt
P.E. No. 43409

RW BUILDING CONSULTANTS, INC.
P.O. Box 230, Valrico, FL 33595
Phone No.: 813.659.9197
FBPE Registry No. 9813

PRODUCT: *THERMA-TRU FIBERGLASS DOOR*

PART OR ASSEMBLY: *ELEVATIONS*

NO.	DATE	REVISIONS	BY
6	7/03/26	UPDATE TO 9TH ED. (2026) FBC	LFS
5	7/17/23	UPDATE TO 8TH ED. (2023) FBC	LFS
4	7/14/20	UPDATE TO 7th ED (2020) FBC	LFS

DATE: 4/28/15
SCALE: N.T.S.
DWG. BY: JK
CHK. BY: LFS
DRAWING NO.: FL-17540.4
SHEET 4 OF 15

© 2015 R.W. Building Consultants Inc.

Z:\2023 FBC Drawings\Therma-Tru\FL-17540 R7\FL-17540.1-4.dwg

Notes:
1. Sidelite assembly screws located 6" from top and bottom & 6 more screws equally spaced between (8 screws total per side jamb).
2. Sidelite assembly screws located 6" from each end and @ center line (3 screws total).

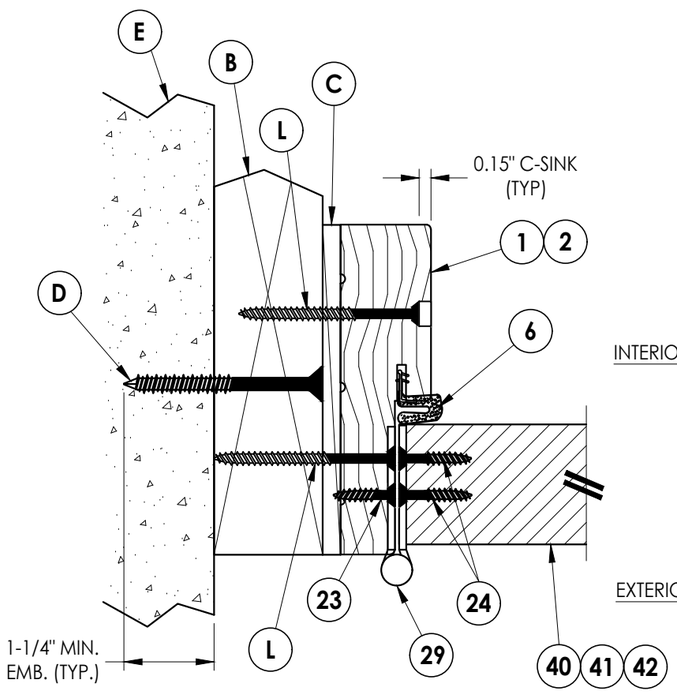

1/5 **HORIZONTAL CROSS SECTION**
Shown w/ 2X Buck
Outswing shown (Inswing similar)

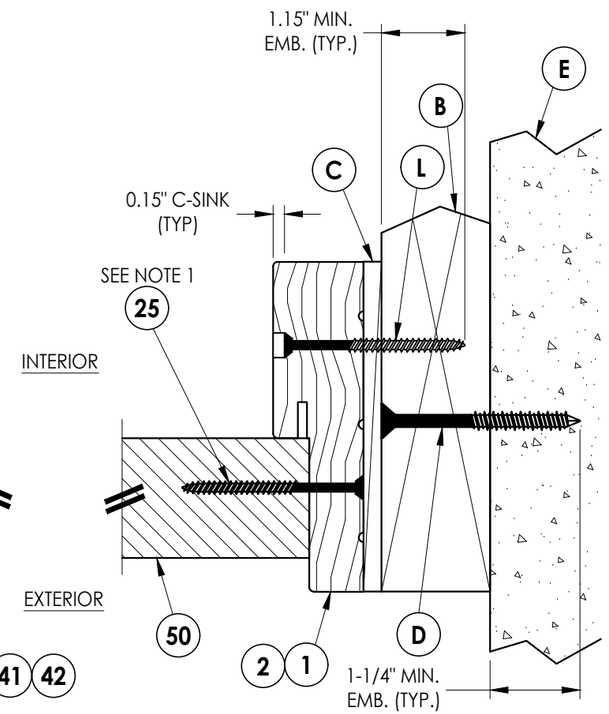

2/5 **HORIZONTAL CROSS SECTION**
Shown w/ 2X Buck
Outswing shown (Inswing similar)

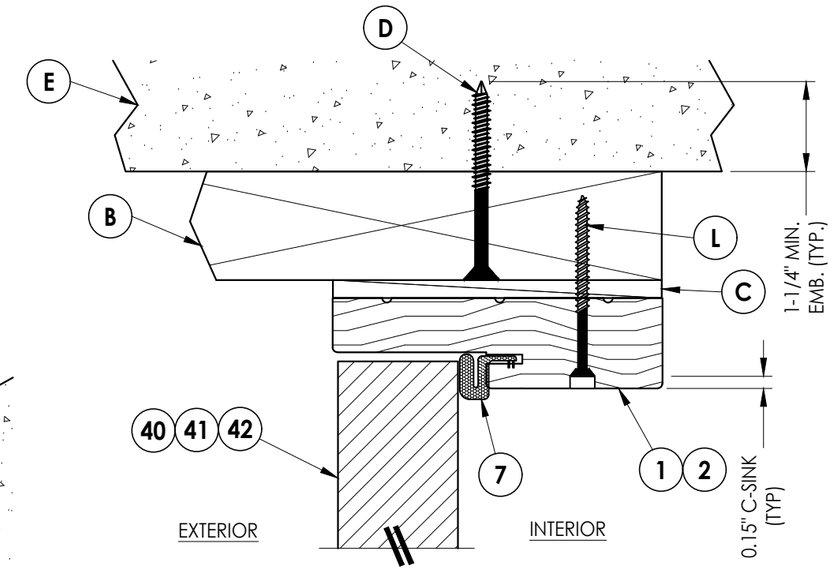

3/5 **VERTICAL CROSS SECTION**
Shown w/ 2X Buck
Outswing shown (Inswing similar)

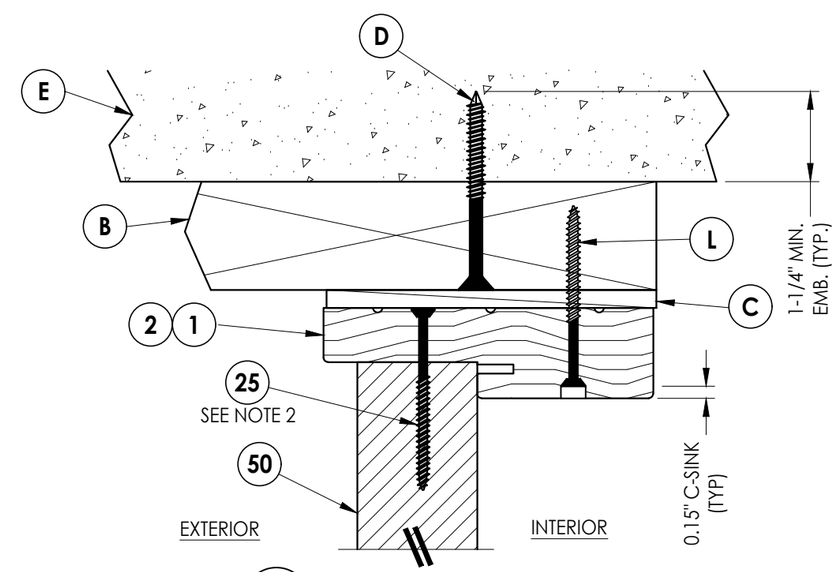

4/5 **VERTICAL CROSS SECTION**
Shown w/ 2X Buck
Outswing shown (Inswing similar)

Documents Prepared By:
Lyndon F. Schmidt
P.E. No. 43409

RW BUILDING CONSULTANTS, INC.
P.O. Box 230, Valrico, FL 33595
Phone No.: 813.659.9197
FBPE Registry No. 9813

PRODUCT: *THERMA-TRU FIBERGLASS DOOR*

PART OR ASSEMBLY: *HORIZONTAL & VERTICAL CROSS SECTIONS (2X BUCK)*

REVISIONS

NO.	DATE		BY
6	7/03/26	UPDATE TO 9TH ED. (2026) FBC	LFS
5	7/17/23	UPDATE TO 8TH ED. (2023) FBC	LFS
4	7/14/20	UPDATE TO 7th ED (2020) FBC	LFS

DATE: 4/28/15
SCALE: N.T.S.
DWG. BY: JK
CHK. BY: LFS
DRAWING NO.: FL-17540.4
SHEET 5 OF 15

© 2015 R.W. BUILDING CONSULTANTS INC.

Z:\2023 FBC Drawings\Therma-Tru\FL-17540 R7\FL-17540.1-4.dwg

Notes:
1. Sidelite assembly screws located 6" from top and bottom &
   6 more screws equally spaced between (8 screws total per side jamb).

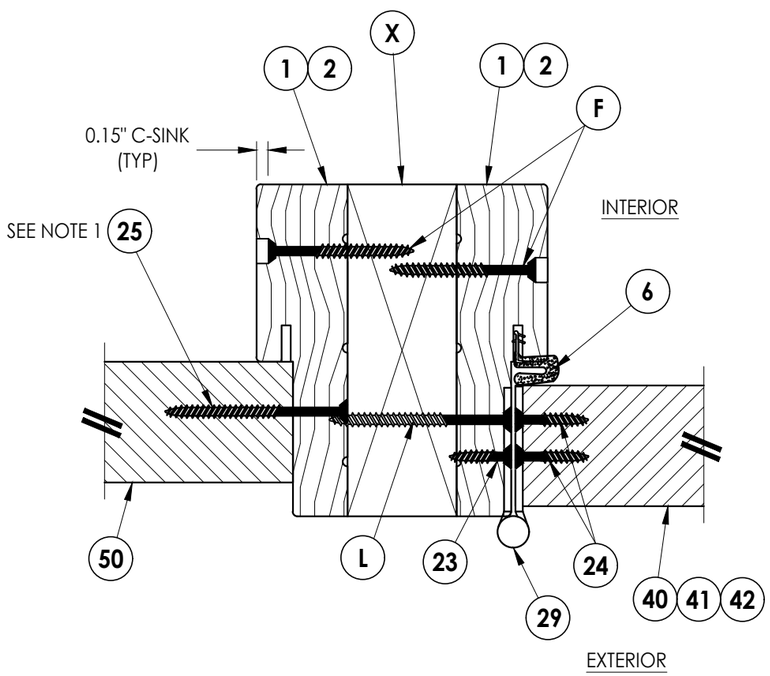

1/6 **HORIZONTAL CROSS SECTION**
Outswing shown (Inswing similar)

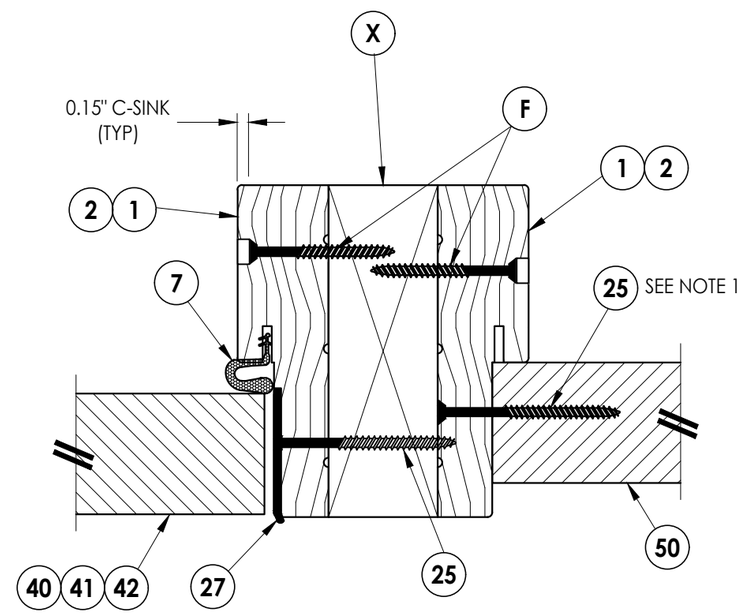

2/6 **HORIZONTAL CROSS SECTION**
Outswing shown (Inswing similar)

Documents Prepared By:
Lyndon F. Schmidt
P.E. No. 43409

RW BUILDING CONSULTANTS, INC.
P.O. Box 230, Valrico, FL 33595
Phone No.: 813.659.9197
FBPE Registry No. 9813

PRODUCT: THERMA-TRU FIBERGLASS DOOR

PART OR ASSEMBLY: HORIZONTAL & VERTICAL CROSS SECTIONS (2X BUCK)

REVISIONS

NO.	DATE		BY
6	7/03/26	UPDATE TO 9TH ED. (2026) FBC	LFS
5	7/17/23	UPDATE TO 8TH ED. (2023) FBC	LFS
4	7/14/20	UPDATE TO 7th ED (2020) FBC	LFS

DATE: 4/28/15
SCALE: N.T.S.
DWG. BY: JK
CHK. BY: LFS
DRAWING NO.: FL-17540.4
SHEET 6 OF 15

© 2015 R.W. BUILDING CONSULTANTS INC.

Z:\2023 FBC Drawings\Therma-Tru\FL-17540 R7\FL-17540.1-4.dwg

Notes:
1. Sidelite assembly screws located 6" from top and bottom & 6 more screws equally spaced between (8 screws total per side jamb).
2. Sidelite assembly screws located 6" from each end and @ center line (3 screws total).

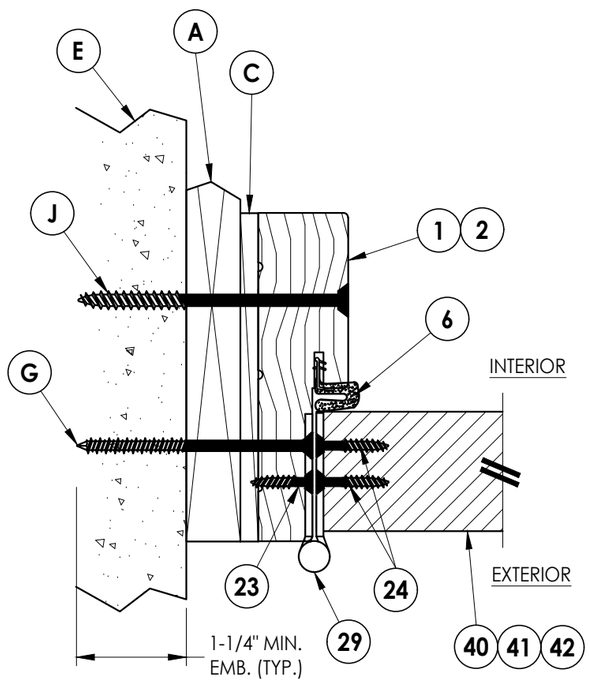

1/7 **HORIZONTAL CROSS SECTION**
Shown w/ 1X sub-buck
Outswing shown (Inswing similar)

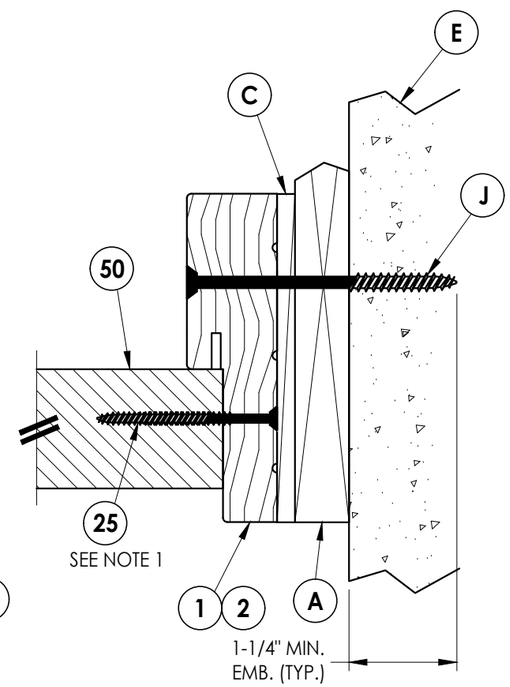

2/7 **HORIZONTAL CROSS SECTION**
Shown w/ 1X sub-buck
Outswing shown (Inswing similar)

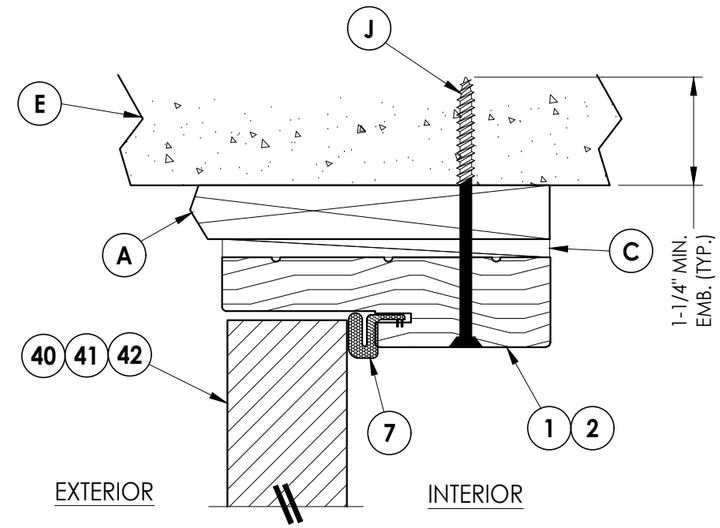

3/7 **VERTICAL CROSS SECTION**
Shown w/ 1X sub-buck
Outswing shown (Inswing similar)

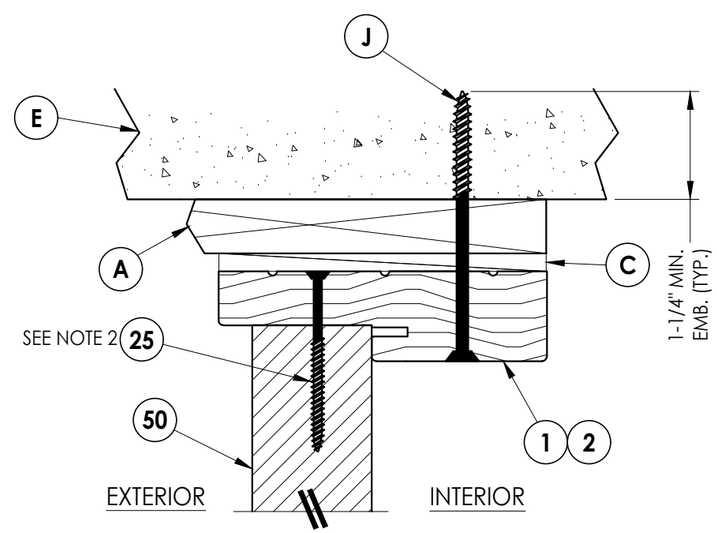

4/7 **VERTICAL CROSS SECTION**
Shown w/ 1X sub-buck
Outswing shown (Inswing similar)

Documents Prepared By:
Lyndon F. Schmidt
P.E. No. 43409

RW BUILDING CONSULTANTS, INC.
P.O. Box 230, Valrico, FL 33595
Phone No.: 813.659.9197
FBPE Registry No. 9813

PRODUCT: THERMA-TRU FIBERGLASS DOOR

PART OR ASSEMBLY: HORIZONTAL & VERTICAL CROSS SECTIONS (1X BUCK)

REVISIONS

NO.	DATE	BY
6	7/03/26	UPDATE TO 9TH ED. (2026) FBC	LFS
5	7/17/23	UPDATE TO 8TH ED. (2023) FBC	LFS
4	7/14/20	UPDATE TO 7th ED (2020) FBC	LFS

DATE: 4/28/15
SCALE: N.T.S.
DWG. BY: JK
CHK. BY: LFS
DRAWING NO.: FL-17540.4
SHEET 7 OF 15

© 2015 R.W. Building Consultants Inc.

Z:\2023 FBC Drawings\Therma-Tru\FL-17540 R7\FL-17540.1-4.dwg

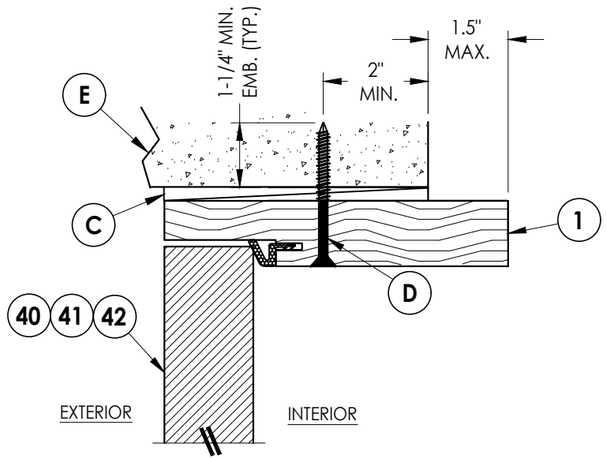

3/8 HORIZONTAL CROSS SECTION
Shown Direct to Masonry
Outswing only w/ 6-9/16" jamb

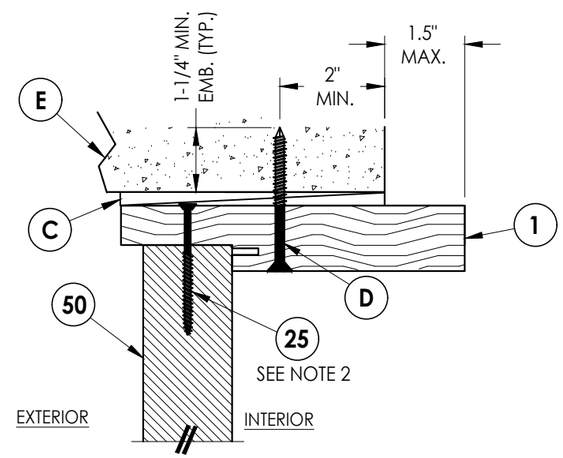

4/8 VERTICAL CROSS SECTION
Shown Direct to Masonry
Outswing only w/ 6-9/16" jamb

Notes:
1. Sidelite assembly screws located 6" from top and bottom & 6 more screws equally spaced between (8 screws total per side jamb).
2. Sidelite assembly screws located 6" from each end and @ center line (3 screws total).

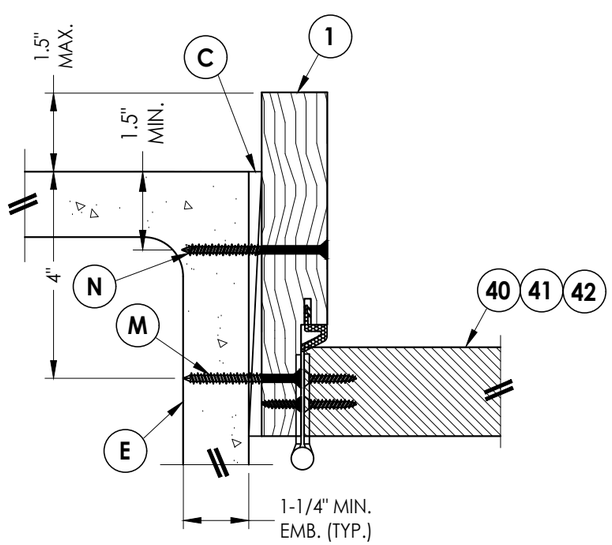

1/8 HORIZONTAL CROSS SECTION
Shown Direct to Masonry
Outswing only w/ 6-9/16" jamb

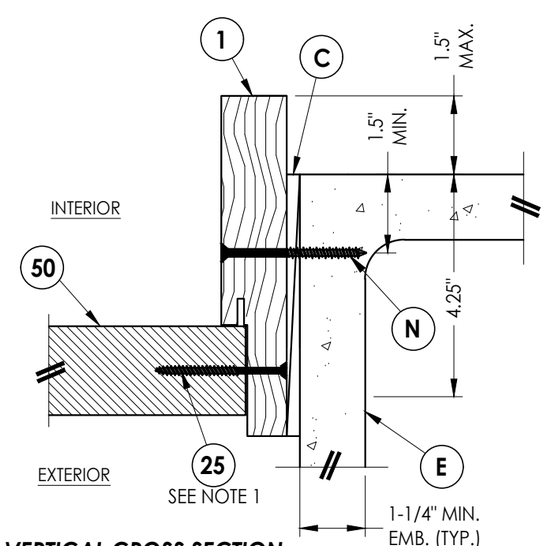

2/8 VERTICAL CROSS SECTION
Shown Direct to Masonry
Outswing only w/ 6-9/16" jamb

Documents Prepared By:
Lyndon F. Schmidt
P.E. No. 43409

R.W. BUILDING CONSULTANTS, INC.
P.O. Box 230, Valrico, FL 33595
Phone No.: 813.659.9197
FBPE Registry No. 9813

PRODUCT: THERMA-TRU FIBERGLASS DOOR

PART OR ASSEMBLY: HORIZONTAL & VERTICAL SECTIONS (DIRECT TO MASONRY)

NO.	DATE	REVISIONS	BY
6	7/03/26	UPDATE TO 9TH ED. (2026) FBC	LFS
5	7/17/23	UPDATE TO 8TH ED. (2023) FBC	LFS
4	7/14/20	UPDATE TO 7th ED (2020) FBC	LFS

DATE: 4/28/15
SCALE: N.T.S.
DWG. BY: JK
CHK. BY: LFS
DRAWING NO.: FL-17540.4
SHEET 8 OF 15

© 2015 R.W. Building Consultants Inc.

Z:\2023 FBC Drawings\Therma-Tru\FL-17540 R7\FL-17540.1-4.dwg

Notes:
1. Sill Item #'s 32, 38 & 39 are attached to jambs w/ (3) #8 X 2-1/2" pfh screws or (3) 2.5" staples at each end.
2. Sill Item #'s 16, 17, 18 & 19 are attached to jambs w/ (2) #8 X 2-1/2" pfh screws at each end.
3. Sill Item #15 is attached to jambs utilizing (2) #10 X 2" pph SMS at each end.
4. Sidelite assembly screws located 4" from each end (2 screws along Sill).

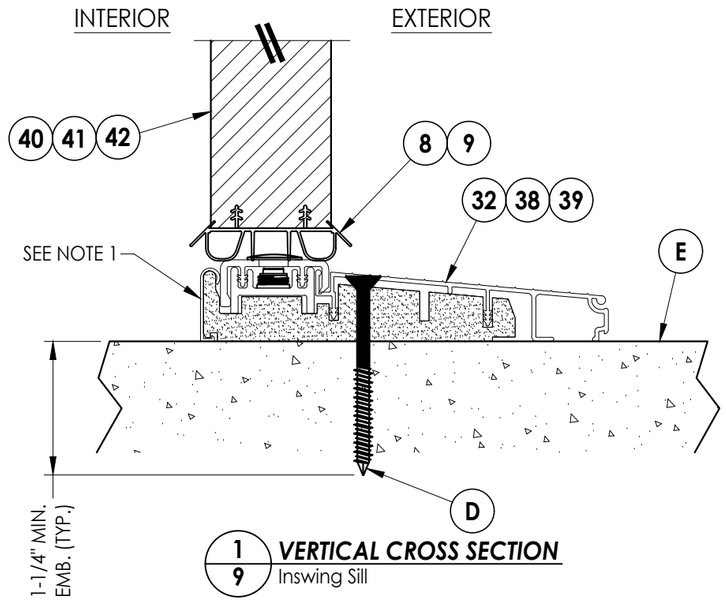

1/9 **VERTICAL CROSS SECTION**
Inswing Sill

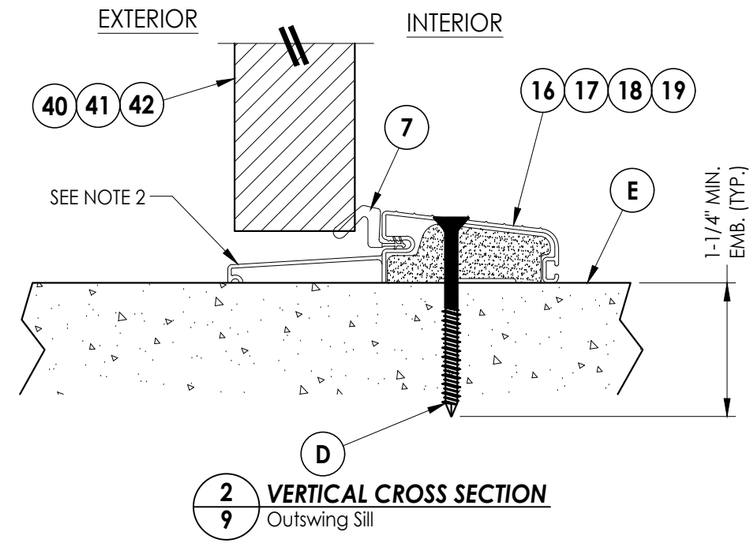

2/9 **VERTICAL CROSS SECTION**
Outswing Sill

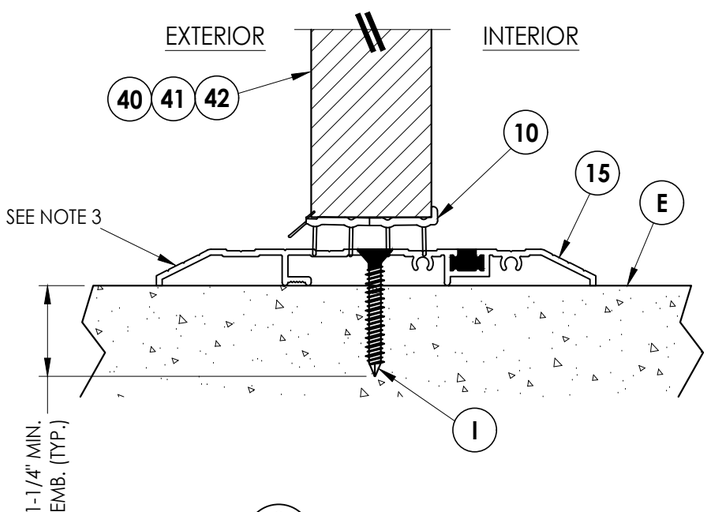

3/9 **VERTICAL CROSS SECTION**
Public Access Sill

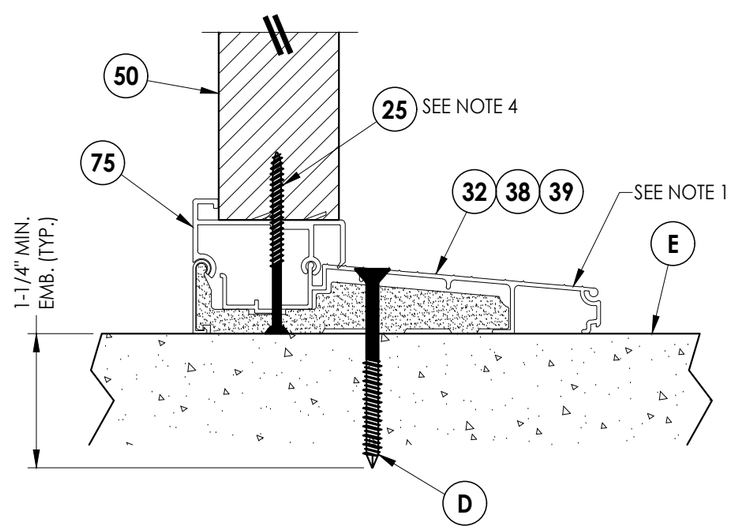

4/9 **VERTICAL CROSS SECTION**
Inswing Sill

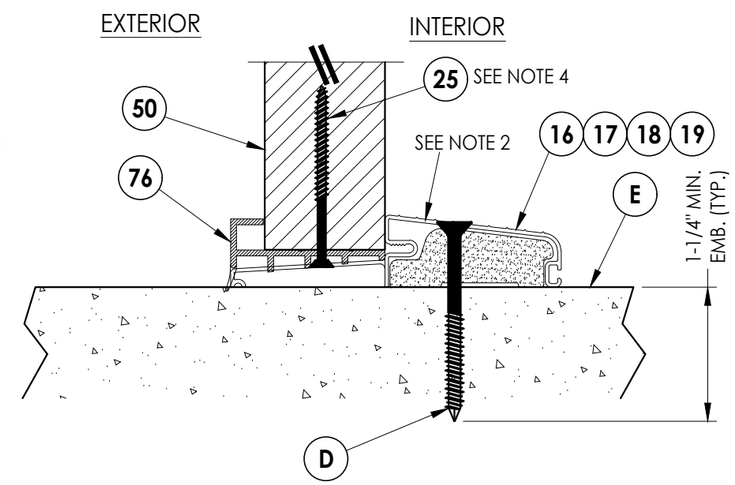

5/9 **VERTICAL CROSS SECTION**
Outswing Sill

Documents Prepared By:
Lyndon F. Schmidt
P.E. No. 43409
R.W. BUILDING CONSULTANTS, INC.
P.O. Box 230, Valrico, FL 33595
Phone No.: 813.659.9197
FBPE Registry No. 9813

PRODUCT: THERMA-TRU FIBERGLASS DOOR

PART OR ASSEMBLY: VERTICAL CROSS SECTIONS (THRESHOLDS)

REVISIONS

NO.	DATE		BY
6	7/03/26	UPDATE TO 9TH ED. (2026) FBC	LFS
5	7/17/23	UPDATE TO 8TH ED. (2023) FBC	LFS
4	7/14/20	UPDATE TO 7th ED (2020) FBC	LFS

DATE: 4/28/15
SCALE: N.T.S.
DWG. BY: JK
CHK. BY: LFS
DRAWING NO.: FL-17540.4
SHEET 9 OF 15

© 2015 R.W. BUILDING CONSULTANTS INC.

Z:\2023 FBC Drawings\Therma-Tru\FL-17540 R7\FL-17540.1-4.dwg

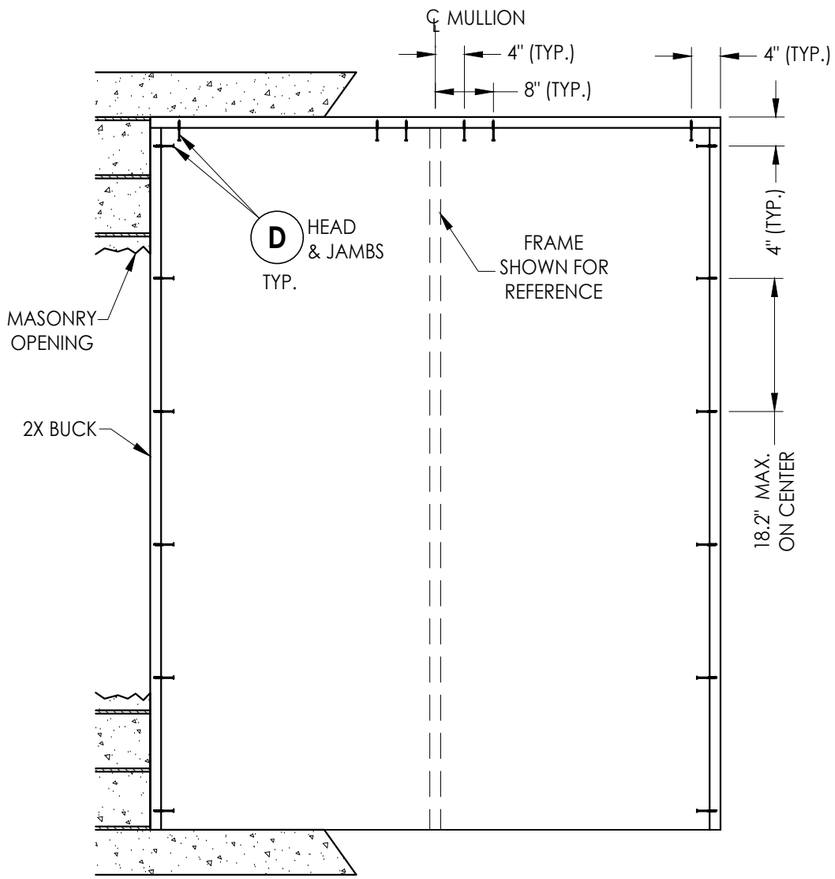

XO/OX

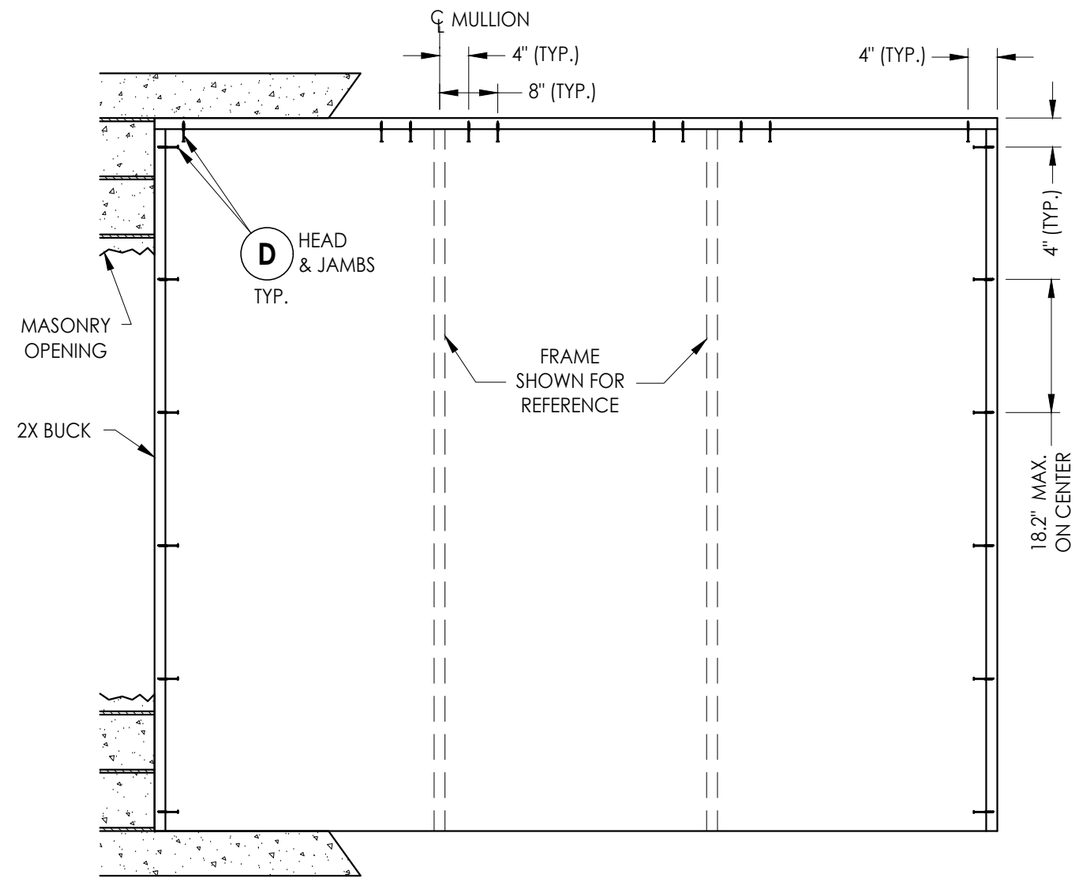

OXO

2X BUCK ANCHORING

Documents Prepared By:
Lyndon F. Schmidt
P.E. No. 43409

R.W. BUILDING CONSULTANTS, INC.
P.O. Box 230, Valrico, FL 33595
Phone No.: 813.659.9197
FBPE Registry No. 9813

PRODUCT: THERMA-TRU FIBERGLASS DOOR

PART OR ASSEMBLY: BUCK ANCHORING

REVISIONS

NO.	DATE		BY
6	7/03/26	UPDATE TO 9TH ED. (2026) FBC	LFS
5	7/17/23	UPDATE TO 8TH ED. (2023) FBC	LFS
4	7/14/20	UPDATE TO 7th ED (2020) FBC	LFS

DATE: 4/28/15
SCALE: N.T.S.
DWG. BY: JK
CHK. BY: LFS
DRAWING NO.: FL-17540.4
SHEET 10 OF 15

© 2015 R.W. Building Consultants Inc.

Z:\2023 FBC Drawings\Therma-Tru\FL-17540 R7\FL-17540.1-4.dwg

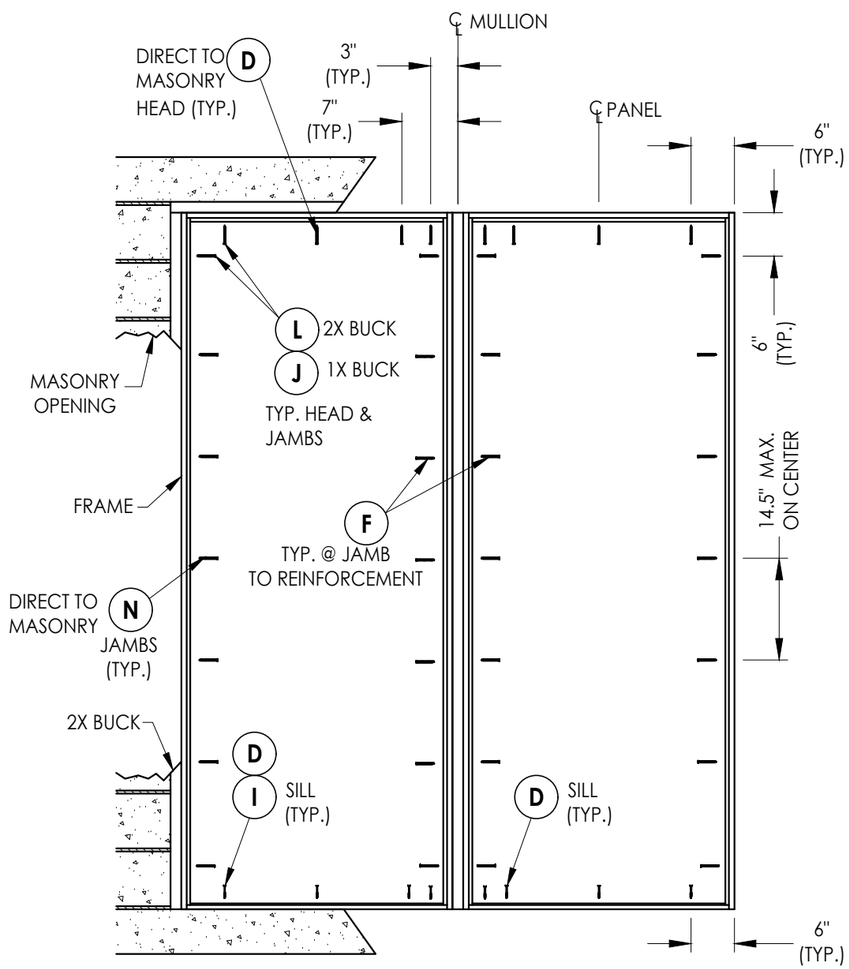

XO/OX

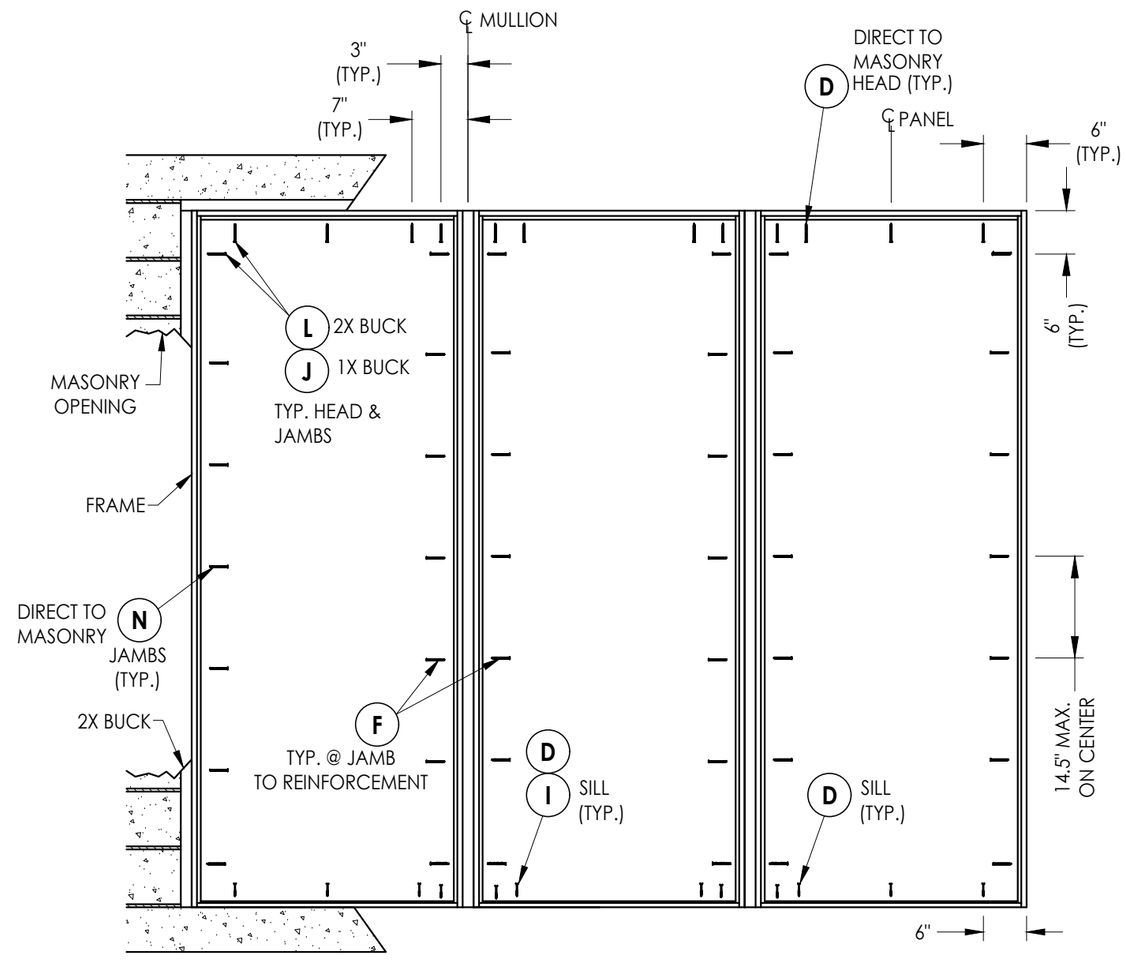

OXO

FRAME ANCHORING

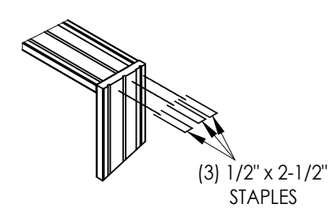

JAMB TO HEAD DETAIL (TYP.)

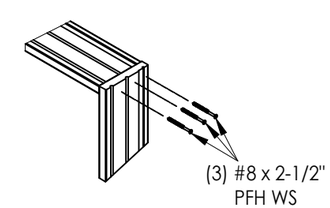

JAMB TO HEAD DETAIL (TYP.)

Documents Prepared By:
Lyndon F. Schmidt
P.E. No. 43409
RW BUILDING CONSULTANTS, INC.
P.O. Box 230, Valrico, FL 33595
Phone No.: 813.659.9197
FBPE Registry No. 9813

PRODUCT: THERMA-TRU FIBERGLASS DOOR

PART OR ASSEMBLY: FRAME ANCHORING

NO.	DATE	REVISIONS	BY
6	7/03/26	UPDATE TO 9TH ED. (2026) FBC	LFS
5	7/17/23	UPDATE TO 8TH ED. (2023) FBC	LFS
4	7/14/20	UPDATE TO 7th ED (2020) FBC	LFS

DATE: 4/28/15
SCALE: N.T.S.
DWG. BY: JK
CHK. BY: LFS
DRAWING NO.: FL-17540.4
SHEET 11 OF 15

© 2015 R.W. Building Consultants Inc.

Z:\2023 FBC Drawings\Therma-Tru\FL-17540 R7\FL-17540.1-4.dwg

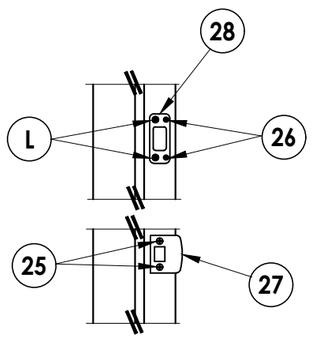

LATCH & DEADBOLT DETAIL
Kwikset

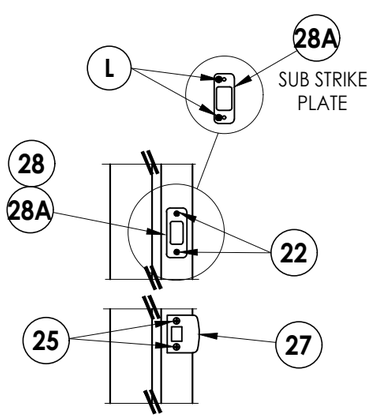

LATCH & DEADBOLT DETAIL
Schlage

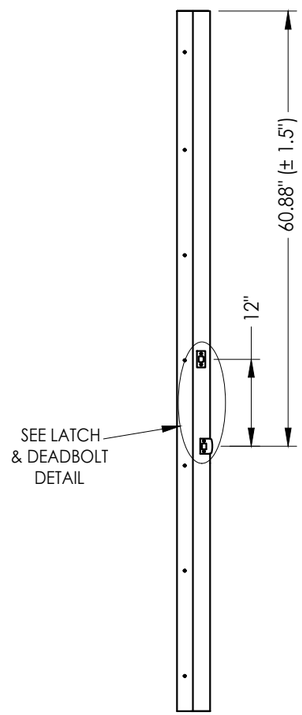

STRIKE JAMB
Latch and Deadbolt

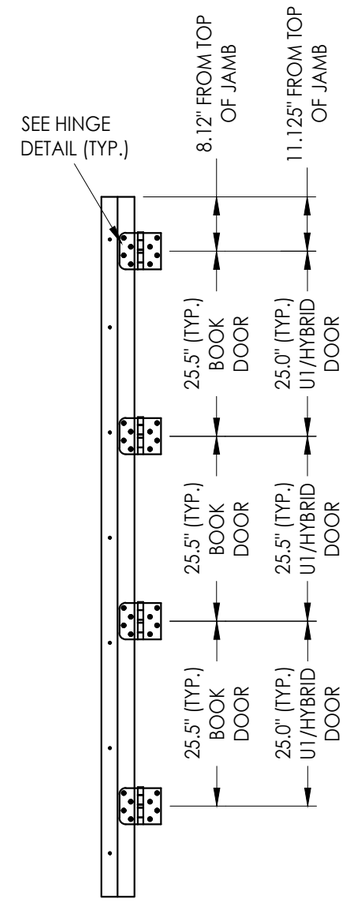

HINGE JAMB

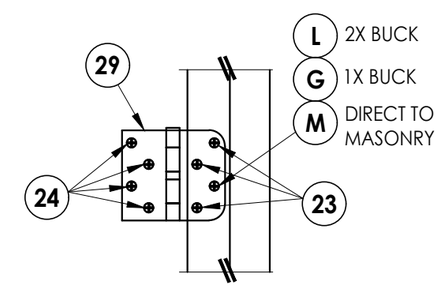

HINGE DETAIL

LATCH & DEADBOLT STRIKE DETAILS

Documents Prepared By:
Lyndon F. Schmidt
P.E. No. 43409

RW BUILDING CONSULTANTS, INC.
P.O. Box 230, Valrico, FL 33595
Phone No.: 813.659.9197
FBPE Registry No. 9813

PRODUCT: THERMA-TRU FIBERGLASS DOOR

PART OR ASSEMBLY: HARDWARE DETAILS

REVISIONS

NO.	DATE		BY
6	7/03/26	UPDATE TO 9TH ED. (2026) FBC	LFS
5	7/17/23	UPDATE TO 8TH ED. (2023) FBC	LFS
4	7/14/20	UPDATE TO 7th ED (2020) FBC	LFS

DATE: 4/28/15
SCALE: N.T.S.
DWG. BY: JK
CHK. BY: LFS
DRAWING NO.: FL-17540.4
SHEET 12 OF 15

© 2015 R.W. BUILDING CONSULTANTS INC.

Z:\2023 FBC Drawings\Therma-Tru\FL-17540 R7\FL-17540.1-4.dwg

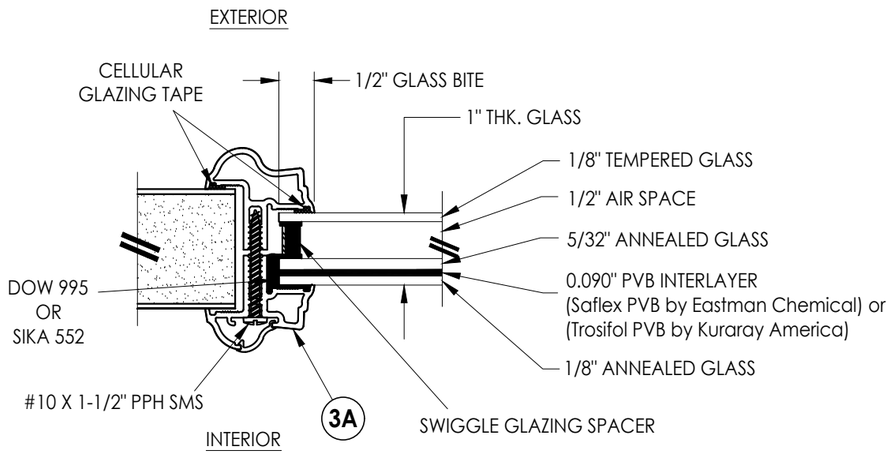

G1 ***GLAZING DETAIL***
Aluminum Impact Lite Frame
Door Panels & Sidelites

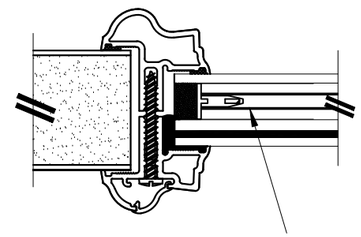

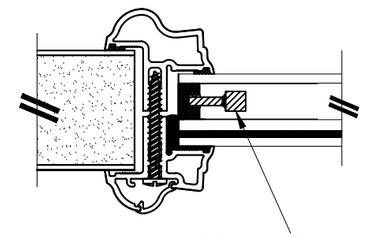

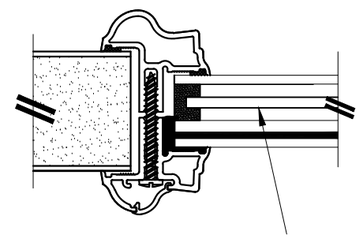

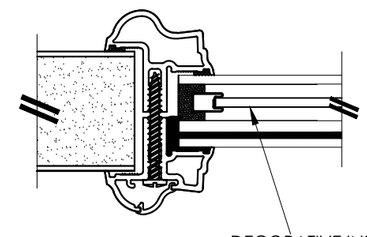

1" LAMINATED INSULATED IMPACT GLASS INSERT OPTIONS

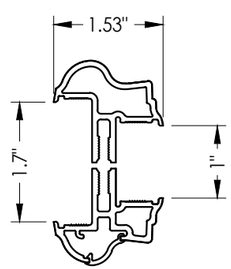

3A ***ALUMINUM FRAME***
Aluminum Impact Lite Frame
Door Panels & Sidelites

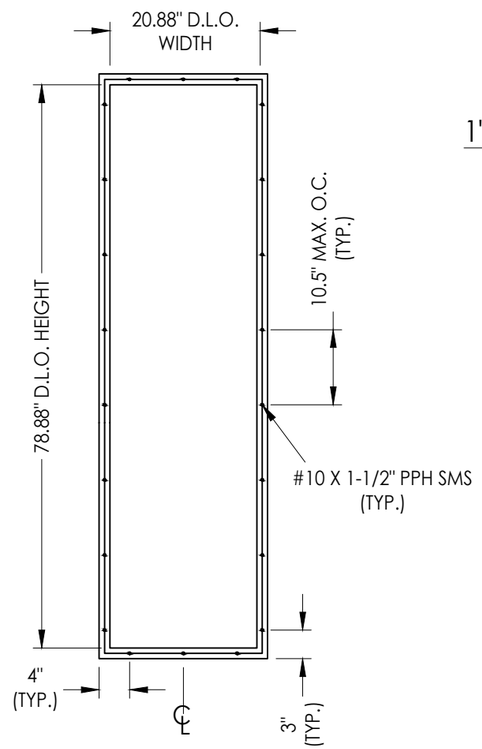

ALUMINUM LITE FRAME

Documents Prepared By:
Lyndon F. Schmidt
P.E. No. 43409
R.W. BUILDING CONSULTANTS, INC.
P.O. Box 230, Valrico, FL 33595
Phone No.: 813.659.9197
FBPE Registry No. 9813

PRODUCT: *THERMA-TRU FIBERGLASS DOOR*

PART OR ASSEMBLY: *GLAZING DETAILS*

NO.	DATE	REVISIONS	BY
6	7/03/26	UPDATE TO 9TH ED. (2026) FBC	LFS
5	7/17/23	UPDATE TO 8TH ED. (2023) FBC	LFS
4	7/14/20	UPDATE TO 7th ED (2020) FBC	LFS

DATE: 4/28/15
SCALE: N.T.S.
DWG. BY: JK
CHK. BY: LFS
DRAWING NO.: FL-17540.4
SHEET 13 OF 15

© 2015 R.W. Building Consultants Inc.

Z:\2023 FBC Drawings\Therma-Tru\FL-17540 R7\FL-17540.1-4.dwg

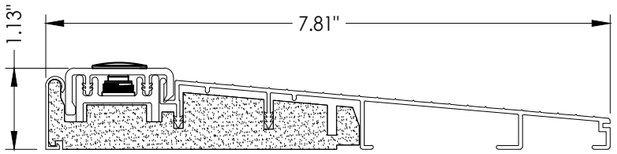

32 ***INSWING THRESHOLD***
Inswing Composite Adjustable 7-3/4" Sill

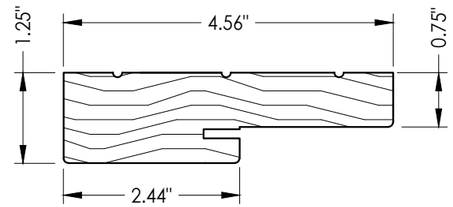

1 ***WOOD JAMB***

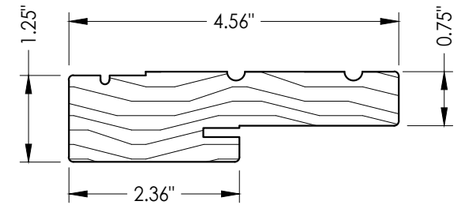

2 ***WOOD JAMB***

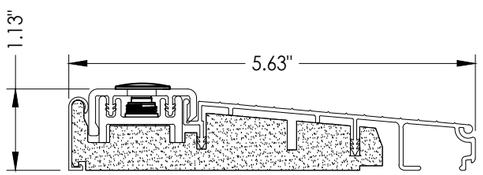

39 ***INSWING THRESHOLD***
Inswing Composite Adjustable Sill

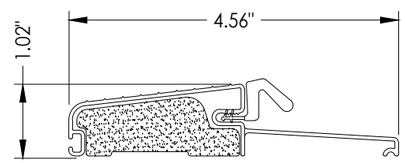

16 ***OUTSWING THRESHOLD***
Composite Sill

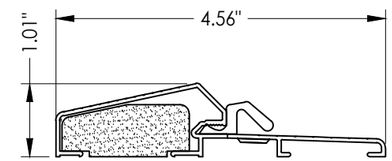

17 ***OUTSWING THRESHOLD***
Composite / Aluminum Sill

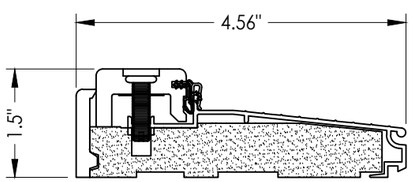

38 ***INSWING THRESHOLD***
Inswing Composite Adjustable Sill

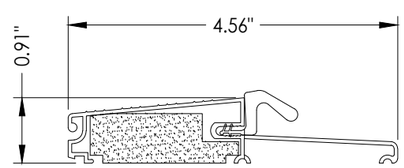

19 ***OUTSWING THRESHOLD***
Composite Sill

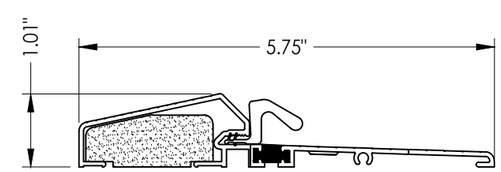

18 ***OUTSWING THRESHOLD***
Composite / Aluminum Sill
(Thermal Break)

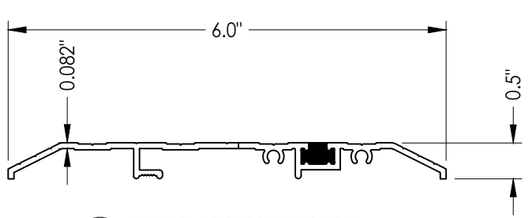

15 ***PUBLIC ACCESS THRESHOLD***

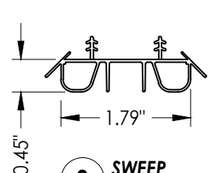

8 ***SWEEP***

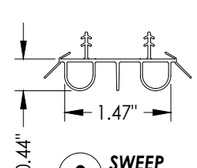

9 ***SWEEP***

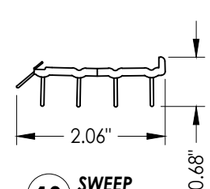

10 ***SWEEP***

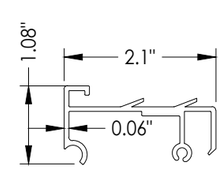

75 ***SIDELITE SPACER***

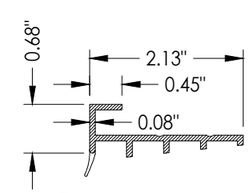

76 ***SIDELITE SPACER***

Documents Prepared By:
Lyndon F. Schmidt
P.E. No. 43409

R.W. BUILDING CONSULTANTS, INC.
P.O. Box 230, Valrico, FL 33595
Phone No.: 813.659.9197
FBPE Registry No. 9813

PRODUCT: *THERMA-TRU FIBERGLASS DOOR*

PART OR ASSEMBLY: *COMPONENTS*

NO.	DATE	REVISIONS	BY
6	7/03/26	UPDATE TO 9TH ED. (2026) FBC	LFS
5	7/17/23	UPDATE TO 8TH ED. (2023) FBC	LFS
4	7/14/20	UPDATE TO 7th ED (2020) FBC	LFS

DATE: 4/28/15
SCALE: N.T.S.
DWG. BY: JK
CHK. BY: LFS
DRAWING NO.: FL-17540.4
SHEET 14 OF 15

© 2015 R.W. Building Consultants Inc.

Z:\2023 FBC Drawings\Therma-Tru\FL-17540 R7\FL-17540.1-4.dwg

BILL OF MATERIALS

ITEM #	DESCRIPTION	MATERIAL
A	1X BUCK (SG >= 0.42)	WOOD
B	2X BUCK (SG >= 0.42)	WOOD
C	1/4" MAX. SHIM SPACE	-
D	1/4" X 2-3/4" PFH ELCO OR ITW CONCRETE SCREW	STEEL
E	MASONRY - 3,000 PSI MIN. CONCRETE CONFORMING TO ACI 301 OR HOLLOW BLOCK CONFORMING TO ASTM C90	CONCRETE
F	#10 X 2" PFH WOOD SCREW	STEEL
G	3/16" X 3-1/4" ITW CONCRETE SCREW	STEEL
I	1/4" X 1-3/4" PFH ELCO OR ITW CONCRETE SCREW	STEEL
J	1/4" X 3-3/4" PFH ELCO OR ITW CONCRETE SCREW	STEEL
K	1/2" X 1" X 25 GA. CORRUGATED FASTENER	STEEL
L	#10 X 2-1/2" PFH WOOD SCREW (1.15" MIN. EMBEDMENT)	STEEL
M	3/16" X 2-1/4" ITW CONCRETE SCREW	STEEL
N	3/16" X 2-3/4" ITW CONCRETE SCREW	STEEL
X	2X MULLION	WOOD
1	JAMB (FINGER JOINT PINE)	WOOD
2	JAMB (FINGER JOINT PINE)	WOOD
6	WEATHERSTRIP (MEDIUM REACH)	FOAM
7	WEATHERSTRIP (LONG REACH)	FOAM
8	SWEEP	VINYL
9	SWEEP (USE w/ MODERATE CLIMATE THRESHOLD)	VINYL
10	SWEEP (USE w/ PUBLIC ACCESS THRESHOLD)	VINYL
15	PUBLIC ACCESS THRESHOLD	ALUM
16	OUTSWING THRESHOLD	ALUM/COMP
17	OUTSWING THRESHOLD	ALUM/COMP
18	OUTSWING THRESHOLD	ALUM/COMP
19	OUTSWING THRESHOLD	ALUM/COMP
22	#8 x 3/4" PFH WOOD SCREW	STEEL
23	#10 x 3/4" PFH WOOD SCREW	STEEL
24	#10 x 1" PFH WOOD SCREW	STEEL

BILL OF MATERIALS

ITEM #	DESCRIPTION	MATERIAL
25	#8 x 2-1/2" PFH WOOD SCREW	STEEL
26	#8 x 5/8" PFH WOOD SCREW	STEEL
27	LATCH STRIKE PLATE	STEEL
28	DEADBOLT STRIKE PLATE	STEEL
28A	DEADBOLT SUB STRIKE PLATE	STEEL
29	4" X 4" HINGE	STEEL
32	INSWING THRESHOLD	ALUM/COMP
34	INTERIOR MULL CASING	WOOD
35	EXTERIOR MULL CASING	WOOD
38	INSWING THRESHOLD	ALUM/COMP
39	INSWING THRESHOLD	ALUM/COMP
40	DOOR PANEL (BOOK)	-
41	DOOR PANEL (HYBRID)	-
42	DOOR PANEL (U1)	-
50	SIDELITE	-
75	SIDELITE SPACER (INSWING)	PVC
76	SIDELITE SPACER (OUTSWING)	PVC

CORROSION RESISTANCE - SALTWATER ENVIRONMENTS
Fasteners & connectors in areas within 3000 ft (914 m) of a saltwater coastline shall comply with FBC Sections 1711.1 or R332.1.

CONCRETE ANCHOR NOTES:

1. *Concrete anchor locations at the corners may be adjusted to maintain the min. edge distance to mortar joints.*
2. *Concrete anchor locations noted as "MAX. ON CENTER" must be adjusted to maintain the min. edge distance to mortar joints, additional concrete anchors may be required to ensure the "MAX. ON CENTER" dimension are not exceeded.*
3. *Concrete anchor table:*

ANCHOR TYPE	ANCHOR SIZE	MIN. EMBEDMENT	MIN. CLEARANCE TO MASONRY EDGE	MIN. CLEARANCE TO ADJACENT ANCHOR
ITW TAPCON®	1/4"	1-1/4"	2"	4"
ELCO ULTRACON®	1/4"	1-1/4"	1"	4"
ITW TAPCON®	3/16"	1-1/4"	AS SHOWN	1-1/2"

WOOD SCREW INSTALLATION NOTES:

1. *Maintain a minimum 5/8" edge distance, 1" end distance, & 1" o.c. spacing of wood screws to prevent the splitting of wood.*

Documents Prepared By:
Lyndon F. Schmidt
P.E. No. 43409
R.W. BUILDING CONSULTANTS, INC.
P.O. Box 230, Valrico, FL 33595
Phone No.: 813.659.9197
FBPE Registry No. 9813

PRODUCT: THERMA-TRU FIBERGLASS DOOR

PART OR ASSEMBLY: BILL OF MATERIALS

NO.	DATE	REVISIONS	BY
6	7/03/26	UPDATE TO 9TH ED. (2026) FBC	LFS
5	7/17/23	UPDATE TO 8TH ED. (2023) FBC	LFS
4	7/14/20	UPDATE TO 7th ED (2020) FBC	LFS

DATE: 4/28/15
SCALE: N.T.S.
DWG. BY: JK
CHK. BY: LFS
DRAWING NO.: FL-17540.4
SHEET 15 OF 15

© 2015 R.W. Building Consultants Inc.

Z:\2023 FBC Drawings\Therma-Tru\FL-17540 R7\FL-17540.1-4.dwg